Management of Biological Invasions (2015) Volume 6, Issue 3: 287–294
doi: http://dx.doi.org/10.3391/mbi.2015.6.3.07

Research Article

Upstream dispersal of an invasive crayfish aided by a fish passage facility

Stuart A. Welsh[1]* and Zachary J. Loughman[2]

[1]*U.S. Geological Survey, West Virginia Cooperative Fish and Wildlife Research Unit, 322 Percival Hall, West Virginia University, Morgantown, West Virginia 26506, USA*

[2]*West Liberty University, Department of Natural Sciences and Mathematics, P.O. Box 295, West Liberty, West Virginia 26074, USA*

E-mail: swelsh@wvu.edu (SAW), zloughman@westliberty.edu (ZJL)

**Corresponding author*

Received: 10 December 2014 / Accepted: 10 March 2015 / Published online: 27 March 2015

Handling editor: Vadim Panov

Abstract

Fish passage facilities for reservoir dams have been used to restore habitat connectivity within riverine networks by allowing upstream passage for native species. These facilities may also support the spread of invasive species, an unintended consequence and potential downside of upstream passage structures. We documented dam passage of the invasive virile crayfish, *Orconectes virilis* (Hagen, 1870), at fish ladders designed for upstream passage of American eels, *Anguilla rostrata* (Lesueur, 1817), in the Shenandoah River drainage, USA. Ladder use and upstream passage of 11 virile crayfish occurred from 2007–2014 during periods of low river discharge (<30 m^3s^{-1}) and within a wide range of water temperatures from 9.0–28.6 °C. Virile crayfish that used the eel ladders were large adults with a mean carapace length and width of 48.0 mm and 24.1 mm, respectively. Our data demonstrated the use of species-specific fish ladders by a non-target non-native species, which has conservation and management implications for the spread of aquatic invasive species and upstream passage facilities. Specifically, managers should consider implementing long-term monitoring of fish passage facilities with emphasis on detection of invasive species, as well as methods to reduce or eliminate passage of invasive species.

Key words: invasive crayfish, *Orconectes virilis*, fish ladder, dam passage, dispersal

Introduction

Crayfish species have been widely introduced in aquatic systems worldwide, often resulting in population decline or extirpation of native crayfish (Gherardi and Holdich 1999; Lodge et al. 2000; Taylor 2002; Gherardi et al. 2011). Non-native crayfish often experience rapid range expansion after an introduction event (Hudina et al. 2012; Sorenson et al. 2012), and crayfish are capable of dispersing upstream and downstream in riverine systems (Robinson et al. 2000; Bubb et al. 2004; Loughman et al. 2013). As an example, consider the virile crayfish, *Orconectes virilis* (Hagen, 1870), a species native to parts of the United States and Canada (Filipová et al. 2010), that has invaded reservoir and riverine systems and negatively impacted native species in Canada (McAlpine et al. 2007), Mexico (Hamr 2002), the Netherlands (Filipová et al. 2010), the United Kingdom (Ahern et al. 2008), and the United States (Rogowski and Stockwell 2006; Larson et al. 2010; Loughman and Welsh 2010; Lieb et al. 2011).

The invasive virile crayfish is widespread in the Mid-Atlantic region, USA, where the species has experienced rapid dispersal from introduction locations (Schwartz et al. 1963; Kilian et al 2010). In the Potomac River drainage, *O. virilis* has contributed to population extirpations of spinycheek crayfish, *Orconectes limosus* (Rafinesque, 1817), and population declines of Allegheny crayfish, *Orconectes obscurus* (Hagen, 1870) (Loughman et al 2009; Kilian et al 2010; Loughman and Welsh 2010; Swecker et al. 2010). Adult virile crayfish are considerably larger than most orconectid crayfish, commonly exceeding 50 mm carapace length (Hazlett et al. 1974). The large body size, large chelae, and aggressive nature of virile crayfish have been associated with impacts on smaller crayfish species (Bovbjerg 1970; Heckenlively 1970).

Upstream dispersal of invasive crayfish in riverine systems may be restricted by reservoir dams

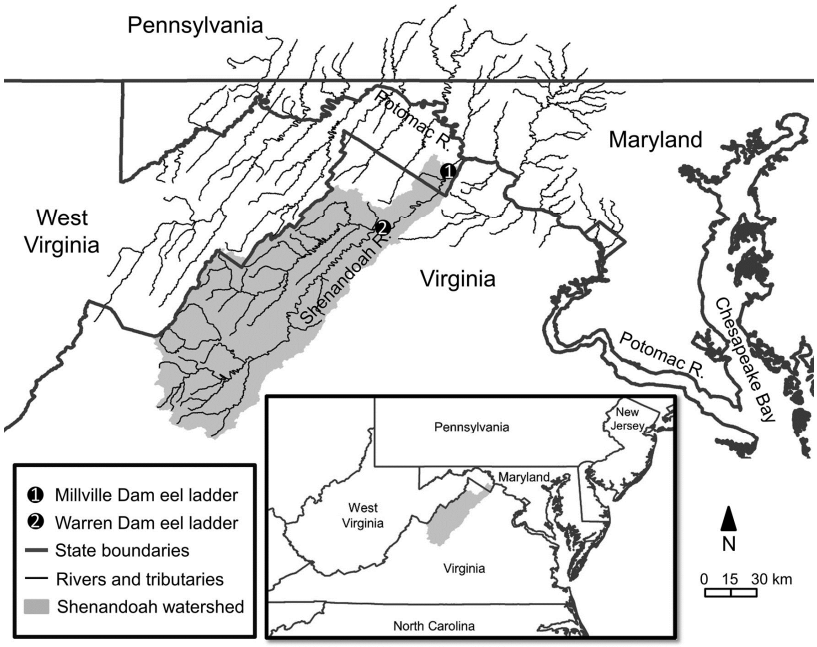

Figure 1. Locations of eel ladders at hydroelectric dams on the Shenandoah River at Millville, West Virginia, and Warren, Virginia, USA.

(Hart et al. 2002; Kerby et al. 2005; Rosewarne et al. 2013). Dams may act as physical barriers to upstream dispersal of crayfish (Dana et al. 2011). Also, high velocity flows in dam tailwaters from spill (top release) or gates (bottom release) may prevent upstream movements by altering crayfish behavior (Foster and Keller 2011). Dams also restrict upstream movements of fishes, which has led to installation of fish passage facilities (Schilt 2007; Roscoe and Hinch 2010) that are often designed for one or more target species, and allow dam passage of non-target species. The use of fish ladders by non-target native species may be viewed as an added benefit for management and conservation, although invasive species may also use ladders to disperse upstream (McLaughlin et al. 2012).

In this study, we report the use of eel ladders (a fish passage facility targeting upstream migrant American eels, *Anguilla rostrata* (Lesueur, 1817)), by the invasive virile crayfish in the lower Shenandoah River, a large tributary of the Potomac River drainage, Mid-Atlantic region, USA. Specifically, our observational data on dam passage of virile crayfish were collected during monitoring studies of eel ladders at Millville and Warren Dams on the Shenandoah River. Although the project objective was to document American eel passage, our incidental data on virile crayfish are relevant to understanding the spread of invasive aquatic species associated with fish passage facilities. The study focused on counts, body size, and sex of virile crayfish using the eel ladders, as well as data on environmental variables associated with passage events.

Methods

The Shenandoah River has a watershed area of approximately 7,870 km^2 within the Valley and Ridge and Blue Ridge physiographic provinces (Jenkins and Burkhead 1994). Two hydroelectric dams are located on the Shenandoah River (Figure 1). A low head hydroelectric dam (296 m width and 5 m height) spans the lower Shenandoah River at Millville, West Virginia, approximately 9 river kilometers (rkm) upstream from the confluence of the Potomac and Shenandoah rivers. The 675 m tailwater section downstream of Millville Dam is adjacent to a hydroelectric canal (490 m headrace, 185 m tailrace) on the western bank of the river. A second low head hydroelectric dam (131 m width and 4 m height, with a 61 m headrace canal) is located at Warren, Virginia, approximately 73 rkm upstream from Millville Dam and 5.8 rkm downstream of the confluence of the North Fork and South Fork Shenandoah rivers. A minimum veil of 2.54 cm of water is maintained on the crests of both dams.

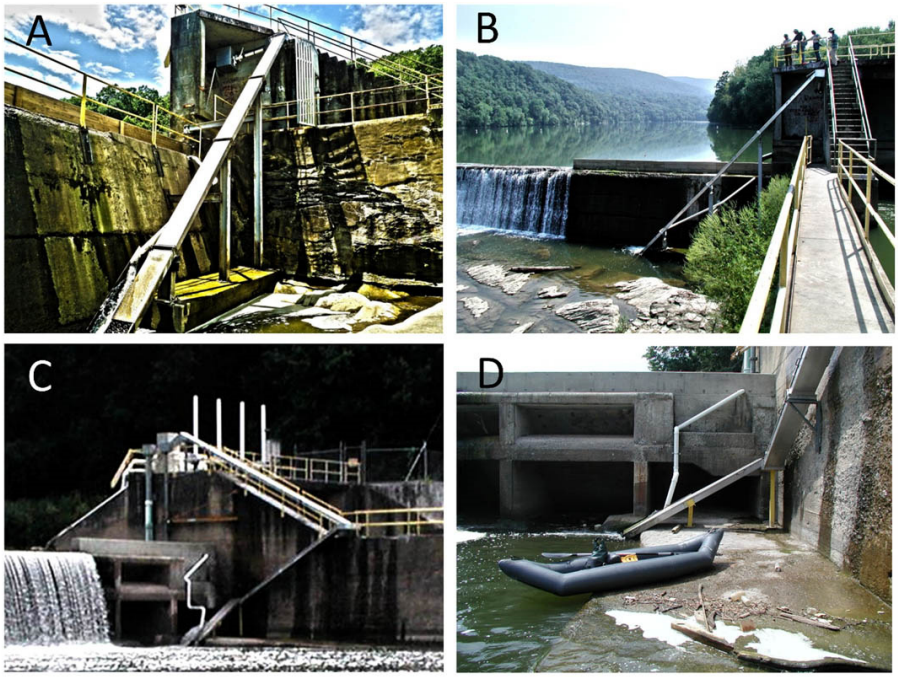

Figure 2. Eel ladders at hydroelectric dams on the Shenandoah River at Millville, West Virginia (A, B) and Warren, Virginia (C, D), USA. Photographs by S.A. Welsh.

Fish ladders, designed for upstream dam passage of 15–80 cm total length American eels, were installed in 2003 and 2007 on the western ends of Millville and Warren Dams, respectively (Milieu Inc, Quebec, Canada; Welsh and Liller 2013; Figure 2). The eel ladders are installed (May–July) and removed each year (typically in November), which prevents ladder damage from high river discharges during the winter–spring time period. The Millville Dam eel ladder is 11 m in length, and sloped at 50°. The Warren Dam eel ladder contains three sections (9 m total length) with the lower section 2.5 m and sloped at 30°, the middle section 2.5 m and sloped at 40°, and the upper section 4 m and sloped at 30°. The eel ladders are covered stainless steel sluices (13 cm depth x 41 cm width) containing an internal peg board substrate of three vertical rows of 5.1 cm diameter ABS plastic pipes, with a minimum distance of 3.8 cm between pipes. At both dams, spill over the dam crest is blocked adjacent to the ladder creating a still pool at the ladder base, and a gravity-fed attraction flow (10 L/s) is delivered from the dam crest to the ladder base at the stream bed by a PVC pipe. At both dams, an electric water pump delivers a volumetric flow rate of 0.5 L/s onto a bevel at the top of the ladder, which diverts water flow in two directions — down the peg board sluice of the ladder and through a 15.2 cm diameter PVC pipe leading to a collection tank upstream of the dam. Within the collection tank, a removable net bag (3.2 mm stretched mesh) is attached to the end of the PVC pipe. Individuals are removed from the net bag for daily counts and measurements of body length, where measurements of total length were obtained for American eels, and carapace length (CL) and carapace width (CW) for virile crayfish.

A camera system with an infra-red trigger was deployed during 2007 at the Millville Dam eel ladder as an alternate to the terminal net bag as a method for monitoring American eel passage (Welsh and Aldinger 2014). The eel ladder camera was tested during 2007, and replaced the terminal net bag as a monitoring method during 2008–2014. The camera system includes a plexiglass box, which is spliced into the PVC pipe on the upstream side of the top of the ladder (Figure 3). A mesh-covered ramp is placed inside of the plexiglass box, so that individuals are elevated above the water flow during passage, which allows for clear photographs during turbid water conditions (Figure 3). A single-lens reflex camera, located outside of the plexiglass box, photographs each American Eel or non-target species that passes through the ladder. Digital images (date and time stamped) of American eels and non-target species allow for counts of individuals,

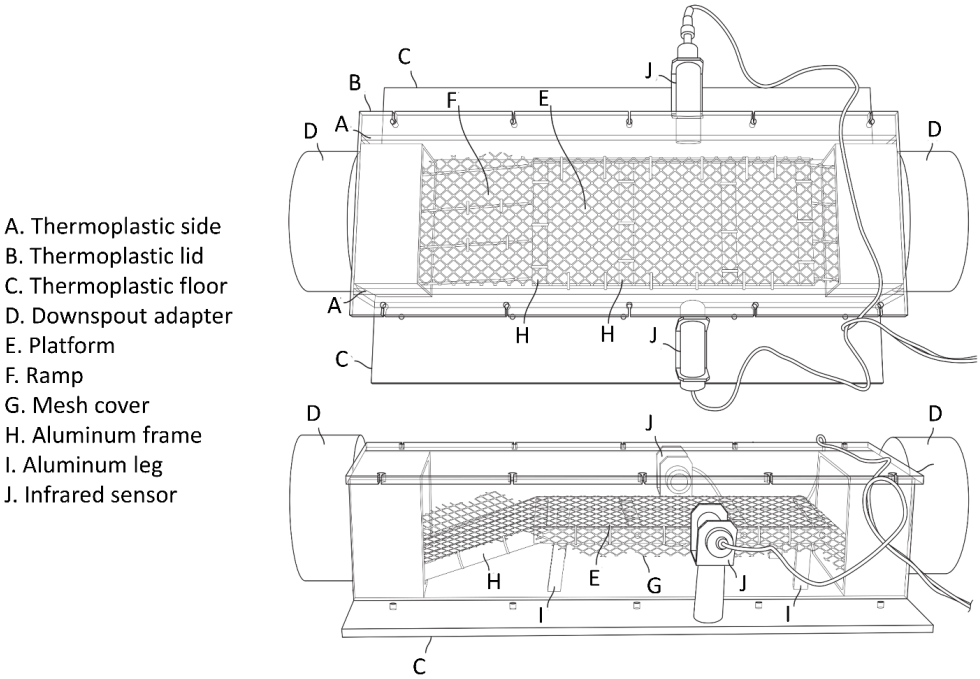

Figure 3. Plexiglass housing (top and side views) used to photograph passing virile crayfish at eel ladders on the Shenandoah River, USA.

data on the timing of passage, and body measurements using photogrammetric methods with digital imaging software (Welsh and Aldinger 2014).

Although the Millville Dam eel ladder was installed in 2003, we did not keep records on non-target species until the eel ladder camera was deployed in 2007. In 2007, an electric water pump delivered a volumetric flow rate of 0.5 L/s to the top of the Millville Dam eel ladder, where a bevel directed about 50% of the flow down the peg board sluice of the ladder and 50% through a 15.2 cm diameter PVC pipe leading through the plexiglass box and toward the upstream terminal end of the ladder. Algal growth on the mesh of the ramped platform in the plexiglass box caused water to flow up the ramp instead of the designed route of through the meshed ramp and under the meshed platform. Water flow up the ramp often caused the infrared sensors to trigger the camera. To fix this issue, we installed a high-porosity mesh on the ramp and platform, and reduced the water flow to the plexiglass box to 20% of the 0.5 L/s flow. This modification also altered the volumetric flow rate down the peg board sluice of the ladder from 50% to 80% of 0.5 L/s.

We calculated mean values and recorded ranges of three environmental variables associated with passage events of virile crayfish, including river discharge (m^3s^{-1}), lunar illumination, and water temperature (°C). River discharge data were obtained from U.S. Geological Survey gages. Lunar illumination, measured as a percentage of the moon face ranging from 0 (new moon) to 1 (full moon), was calculated from an astronomical algorithm (Meeus 1991). Water temperature of the Shenandoah River was recorded at Millville and Warren Dams (StowAway Tidbit Temp Logger, Onset Computer Corporation).

Results

During 2007–2014, the Millville Dam eel ladder passed 18,215 American eels, and 10 virile crayfish. Virile crayfish used the Millville Dam eel ladder during July–November, and passage events were not distributed evenly across the 2007-2014 time period, but included eight individuals in 2007, zero individuals during 2008–2013, and two individuals in 2014 (Table 1). During 2007–2010, the Warren Dam eel ladder passed 38 American eels, and one virile crayfish on 13 June 2008

Table 1. Annual passage counts of virile crayfish and American eels at the Millville and Warren Dam eel ladders, Shenandoah River, USA.

Site	Year	Sample period	Sample days	American eel count	Virile crayfish count
Millville Dam eel ladder					
	2007	10 May–6 November	181	852	8
	2008	6 June–6 November	154	1616	0
	2009	22 June–9 November	141	1311	0
	2010	6 May–9 November	188	5394	0
	2011	28 June–7 November	133	1255	0
	2012	9 May–12 November	188	4263	0
	2013	1 July–21 October	113	2470	0
	2014	22 July–5 November	106	1054	2
Warren Dam eel ladder					
	2007	8 May–6 November	182	21	0
	2008	9 June–10 November	154	2	1
	2009	1 July–20 October	111	4	0
	2010	17 May– 1 October	137	11	0

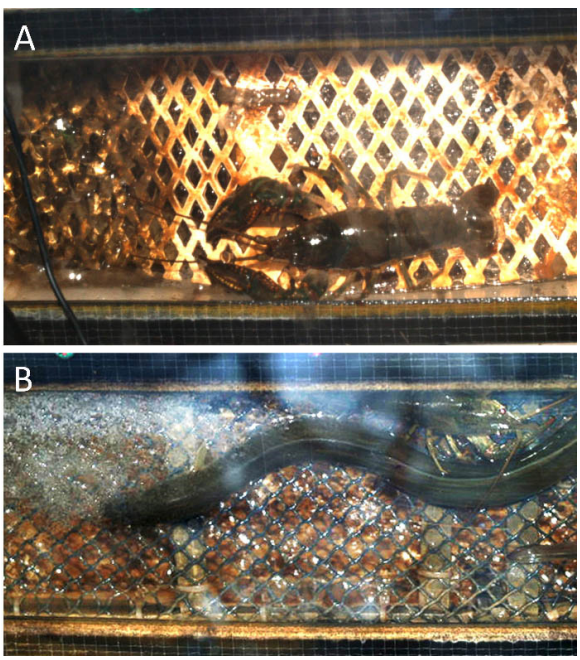

Figure 4. Photographs of virile crayfish passing though the Millville Dam eel ladder, including (A) a 49.5 mm carapace length individual on 5 November 2007 and (B) a 41.3 mm carapace length individual next to an American eel on 2 September 2014. Photographs by S.A. Welsh.

(Table 1). For the three years with virile crayfish passage (2007, 2008, and 2014), the Millville eel ladder operated from 10 May to 6 Nov 2007 (181 days) and from 22 July to 5 Nov 2014 (106 days), and the Warren eel ladder operated from 9 June to 10 Nov 2008 (155 days, Table 1).

Data on body size (CL and CW), sex, and time of day provided descriptive information relevant to dam passage of virile crayfish. Ten of 11 individuals that passed through the eel ladders (one large adult escaped before measurement) were large adults with mean ± SE carapace length and width of 48.0 mm ± 1.8 and 24.1 mm ± 1.1, respectively. Female and male virile crayfish used the ladders; 3 females, 4 males, and 4 not sexed. At the Millville Dam eel ladder, three virile crayfish were photographed by the eel ladder camera, where passage times occurred during daylight hours for two individuals (7:13 and 10:27 h). A third virile crayfish passed at night (23:01 h) and was photographed next to an American eel (Figure 4).

Examination of river discharge, water temperature, and lunar illumination provided insight into associations among environmental variables and passage events of virile crayfish. Virile crayfish used the eel ladders during periods of low river discharge (mean ± SE = 20.0 m^3s^{-1} ± 1.5, range 13.4–29.7 m^3s^{-1}). For 2007 and 2014, the annual mean ± SE of daily river discharge values at Millville Dam were 62.0 m^3s^{-1} ± 3.8 (range 13.2–606.0 m^3s^{-1}) and 96.9 m^3s^{-1} ± 6.2 (range 12.7–1200.6 m^3s^{-1}), respectively. During 2008, the mean ± SE daily river discharge at Warren Dam was 37.7 m^3s^{-1} ± 1.8 (range 9.0–273.8 m^3s^{-1}). Virile crayfish used the eel ladders during a wide range of water temperature (mean ± SE = 23.7°C ±1.8, range 9.0–28.6°C) and lunar illumination (mean ± SE = 0.53 ± 0.09, range 0.06–0.93).

Discussion

Our data documented dam passage of adult female and male virile crayfish, demonstrating a potential for upstream dispersal via fish passage facilities on the Shenandoah River. It is not known whether virile crayfish were introduced or dispersed upstream in the Shenandoah River (upstream of Millville Dam) prior to eel ladder installation. The large adult virile crayfish that used the Warren Dam eel ladder on 13 June 2008 may represent a separate introduction event, or possibly the offspring of individuals that dispersed upstream from Millville Dam, as the distance from Millville Dam to Warren Dam is approximately 73 rkm. Because dispersal of large crayfish may be hindered in high flow areas (Maude and Williams 1983; Clark et al. 2008), adult virile crayfish may be unsuccessful at scaling Millville and Warren dams, owing to the constant spill of water over the dam crests and down the vertical dam faces.

Juvenile or small virile crayfish (<36.0 mm CL) did not use the eel ladders, which may reflect a higher likelihood of larger individuals to disperse upstream or may result from intolerance of small individuals to either the ladder slope or water flow down the ladder. Studies comparing dispersal of small vs. large crayfish have reported greater dispersal for smaller (Webb and Richardson 2004; Loughman et al. 2013) and larger individuals (Robinson et al. 2000; Light 2003). It is likely that movement patterns of non-native crayfish differ from those of native species, given that non-native species often undergo rapid range expansions (Hudina et al. 2012; Sorenson et al. 2012). Foster and Keller (2011) found that small crayfish had a relatively low tolerance to current velocity when passing through culverts. In contrast, Clark et al. (2008) found that smaller individuals were more tolerant of current velocities than that of larger individuals in a natural stream. Foster and Keller (2011) suggested that smaller crayfish may use rock crevices as velocity barriers in a stream, whereas most culverts do not have water velocity barriers. In our study, the peg substrate of the eel ladders possibly assists larger crayfish but not smaller individuals when climbing the 30–50° slopes.

Our data demonstrate that the configuration or slopes (30–50°) of the eel ladders are not a deterrent for adult virile crayfish. The internal peg board substrate of the eel ladders likely aided the climbing ability of virile crayfish, and the 3.8 cm distance between pegs was wider than the carapace widths of the 11 individuals. The volumetric flow rate of water descending down the ladder, however, may influence crayfish use of the eel ladder. In our study, an increase in the volumetric flow rate of water down the ladder, as an adjustment to improve the eel ladder camera system at Millville Dam, appeared to have an unintended effect of reducing the use of the eel ladder by virile crayfish. Experimental laboratory studies, however, are needed to fully understand the influence of volumetric flow rate on ladder use of virile crayfish. It may be possible to prevent upstream passage of virile crayfish by ladder modification (Frings et al. 2013). However, addition of a physical barrier to the eel ladder entrance for preventing crayfish passage will likely also affect passage of American eels.

Ladder use and dam passage of virile crayfish occurred across a wide range of environmental variables. Most passage events occurred when river discharge was low (<30 m^3s^{-1}), which may be explained by either reduced upstream movements during high river discharges, or the inability of virile crayfish to find the ladder base when the dam spillway is inundated by high water levels. Although nine of the 10 passage events occurred at summer or fall water temperatures between 19.6 and 28.6 °C, the passage of one virile crayfish at 9.0 °C water temperature during November demonstrated that dam passage is not restricted to warmer months. Virile crayfish experience cold temperatures in their native range, thus movement during colder water temperatures is not unexpected. The wide range of lunar illumination at the time of passage events (0.06 to 0.99% fraction of the moon face) suggests that moon phase was not associated with passage events. The time of passage was recorded for only three of 11 passage events; two individuals passed during daylight hours and one at night, but if the remaining seven moved at night then they did so across a wide range of lunar illumination levels.

It is possible that eel odour from the eel ladder lowers the use of the ladder by crayfish, which could explain why only 10 individuals used the Millville Dam ladder during 2007–2014. In an experimental laboratory study of crayfish exposure to eel odour, Hirvonen et al. (2007) found that noble crayfish, *Astacus astacus* (Linnaeus, 1758), retreated to shelter, whereas signal crayfish, *Pacifastacus leniusculus* (Dana, 1852), appeared to be attracted to eel odour. American eels did not use the Millville Dam eel ladder on the eight days of crayfish passage in 2007, or during the day of crayfish passage at the Warren Dam eel

ladder. Contrastingly, on 28 August 2014, a virile crayfish and an American eel used the Millville Dam eel ladder at the same time, and an additional 42 American eels used the ladder on that day (Figure 4). On 2 September 2014, one virile crayfish and 16 American eels used the ladder. Thus, data from 2014 suggests that eel odour does not always dissuade ladder use by virile crayfish.

Because American eels are avid crayfish predators, it is possible that higher densities of American eels owing to upstream passage could limit upstream dispersal of virile crayfish in the Shenandoah River. Aquiloni et al. (2010) examined the use of European eels, *Anguilla anguilla* (Linnaeus, 1758), as a biological control of the invasive red swamp crayfish, *Procambarus clarkii* (Girard, 1852). Also, Mount et al. (2011) suggested the use of American eel as a biological control of the invasive rusty crayfish, *Orconectes rusticus* (Girard, 1852), in tributaries to the Hudson River, New York. Aquiloni et al. (2010) reported that large crayfish were less vulnerable to eel predation. Given that virile crayfish grow to a large adult size, American eel predation may not effectively control population expansion of the virile crayfish in the Shenandoah River upstream of Millville Dam.

This study demonstrated that an eel ladder can aid upstream dispersal of the invasive virile crayfish. The use of fish ladders by invasive species likely occurs in other riverine systems, but few studies have documented non-target species use of fish ladders. Within the last decade, virile crayfish have been documented from the Shenandoah River upstream of Millville Dam (Z. Loughman, unpublished data), but we do not know if this population was introduced through passage at Millville Dam, or if individuals using the ladder are supplementing a previously introduced population. Given that reservoirs are hotspots for invasive species (Johnson et al. 2008) and multiple introductions of virile crayfish have been documented in the Mid-Atlantic region, it is likely that virile crayfish were present upstream of Millville Dam before ladder installation. Nonetheless, it is important to note that fish passage facilities can aid upstream dispersal of invasive species. Also, our study demonstrates that long-term monitoring may be needed to document presence of invasive species. Our results indicate the importance of considering passage of invasive crayfish species when planning fish passage facilities.

Acknowledgements

We thank J. Aldinger, M. Braham, and J. Zimmerman for field assistance, and West Virginia Division of Natural Resources, and PE Hydro Generation, LLC for funding this research. The use of trade names or products does not constitute endorsement by the U.S. Government. This study was conducted under a protocol approved by the Institutional Animal Care and Use Committee at West Virginia University. We thank the anonymous reviewers for improving the manuscript.

References

Ahern D, England J, Ellis A (2008) The virile crayfish, *Orconectes virilis* (Hagen, 1870) (Crustacea: Decapoda: Cambaridae), identified in the UK. *Aquatic Invasions* 3: 102–104, http://dx.doi.org/10.3391/ai.2008.3.1.18

Aquiloni L, Brusconi S, Cecchinelli E, Tricarico E, Mazza G, Paglianti A, Gherardi F (2010) Biological control of invasive populations of crayfish: the European eel (*Anguilla anguilla*) as a predator of *Procambarus clarkii*. *Biological Invasions* 12: 3817–3824, http://dx.doi.org/10.1007/s10530-010-9774-z

Bovbjerg RV (1970) Ecological isolation and competitive exclusion in two crayfish (*Orconectes virilis* and *Orconectes immunis*). *Ecology* 51: 225–236, http://dx.doi.org/10.2307/1933658

Bubb DH, Thom TJ, Lucas MC (2004) Movement and dispersal of the invasive signal crayfish *Pacifastacus leniusculus* in upland rivers. *Freshwater Biology* 49: 357–368, http://dx.doi.org/10.1111/j.1365-2426.2003.01178.x

Clark JM, Kershner MW, Holomuzki JR (2008) Grain size and sorting effects on size-dependent responses by lotic crayfish to high flows. *Hydrobiologia* 610: 55–66, http://dx.doi.org/10.1007/s10750-008-9422-0

Dana ED, García-de-Lomas J, González R, Ortega F (2011) Effectiveness of dam construction to contain the invasive crayfish *Procambarus clarkii* in a Mediterranean mountain stream. *Ecological Engineering* 37: 1607–1613, http://dx.doi.org/10.1016/j.ecoleng.2011.06.014

Filipová L, Holdich DM, Lesobre J, Grandjean F, Petrusek A (2010) Cryptic diversity within the invasive virile crayfish *Orconectes virilis* (Hagen, 1870) species complex: new lineages recorded in both native and introduced ranges. *Biological Invasions* 12: 983–989, http://dx.doi.org/10.1007/s10530-009-9526-0

Foster HR, Keller TA (2011) Flow in culverts as a potential mechanism of stream fragmentation for native and non-indigenous crayfish species. *Journal of the North American Benthological Society* 30: 1129–1137, http://dx.doi.org/10.1899/10-096.1

Frings RM, Vaeßen SCK, Groß H, Roger S, Schüttrumpf H, Hollert H (2013) A fish-passable barrier to stop the invasion of non-indigenous crayfish. *Biological Conservation* 159: 521–529, http://dx.doi.org/10.1016/j.biocon.2012.12.014

Gherardi F, Holdich DM (eds) (1999) Crayfish in Europe as Alien Species. How to make the best of a bad situation? A. A. Balkema, Rotterdam, 310 pp

Gherardi F, Aquiloni L, Diéguez-Uribeondo J, Tricarico E (2011) Managing invasive crayfish: is there a hope? *Aquatic Sciences* 73: 185–200, http://dx.doi.org/10.1007/s00027-011-0181-z

Hamr P (2002) *Orconectes*. In: Holdich DM (ed), Biology of Freshwater Crayfish. Blackwell Science, Oxford, pp 585–608

Hart DD, Johnson TE, Bushaw-Newton KL, Horwitz RJ, Bednarek AT, Charles DF, Kreeger DA, Velinsky DJ (2002) Dam removal: challenges and opportunities for ecological research and river restoration. *Bioscience* 52: 669–681, http://dx.doi.org/10.1641/0006-3568(2002)052[0669:DRCAOF]2.0.CO;2

Hazlett B, Rittschof D, Rubenstein D (1974) Behavioral biology of the crayfish *Orconectes virilis* I. Home range. *American Midland Naturalist* 92: 301–319, http://dx.doi.org/10.2307/2424296

Heckenlively DB (1970) Intensity of aggression in the crayfish, *Orconectes virilis* (Hagen). *Nature* 225: 180–181, http://dx.doi.org/10.1038/225180a0

Hirvonen H, Holopainen S, Lempiäinen N, Selin M, Tulonen J (2007) Sniffing the trade-off: effects of eel odours on nocturnal foraging activity of native and introduced crayfish juveniles. *Marine and Freshwater Behaviour and Physiology* 40: 213–218, http://dx.doi.org/10.1080/10236240701556919

Hudina S, Hock K, Žganec K, Lucić A (2012) Changes in population characteristics and structure of the signal crayfish at the edge of its invasive range in a European river. *Annales de Limnologie - International Journal of Limnology* 48: 3–11, http://dx.doi.org/10.1051/limn/2011051

Jenkins RE, Burkhead NM (1994) The freshwater fishes of Virginia. American Fisheries Society, Bethesda, Maryland, 1079 pp

Johnson PTJ, Olden JD, Vander Zanden MJ (2008) Dam invaders: impoundments facilitate biological invasions into freshwaters. *Frontiers in Ecology and the Environment* 6: 357–363, http://dx.doi.org/10.1890/070156

Kerby JL, Riley SPD, Kats LB, Wilson P (2005) Barriers and flow as limiting factors in the spread of an invasive crayfish (*Procambarus clarkii*) in southern California streams. *Biological Conservation* 126: 402–409, http://dx.doi.org/10.1016/j.biocon.2005.06.020

Kilian JV, Becker AJ, Stranko SA, Ashton M, Klauda RJ, Gerber J, Hurd M (2010) Status and distribution of Maryland crayfishes. *Southeastern Naturalist 9* (Special Issue 3): 11–32

Larson ER, Busack CA, Anderson JD, Olden JD (2010) Widespread distribution of the non-native northern crayfish (*Orconectes virilis*) in the Columbia River basin. *Northwest Science* 84:108–111, http://dx.doi.org/10.3955/046.084.0112

Lieb DA, Bouchard RW, Carline RF, Nuttall TR, Wallace JR, Burkholder CL (2011) Conservation and management of crayfishes: lessons from Pennsylvania. *Fisheries* 36: 489–507, http://dx.doi.org/10.1080/03632415.2011.607080

Light T (2003) Success and failure in a lotic crayfish invasion: the roles of hydrologic variability and habitat alteration. *Freshwater Biology* 48: 1886–1897, http://dx.doi.org/10.1046/j.1365-2427.2003.01122.x

Lodge DM, Taylor CA, Holdich DM, Skurdal J (2000) Non-indigenous crayfishes threaten North American freshwater biodiversity: Lessons from Europe. *Fisheries* 25: 7–20, http://dx.doi.org/10.1577/1548-8446(2000)025<0007:NCTNAF>2.0.CO;2

Loughman ZJ, Simon TP, Welsh SA (2009) West Virginia crayfishes (Decapoda: Cambaridae): Observations on distribution, natural history, and conservation. *Northeastern Naturalist* 16: 225–238, http://dx.doi.org/10.1656/045.016.0205

Loughman ZJ, Welsh SA (2010) Distribution and conservation standing of West Virginia crayfishes. *Southeastern Naturalist* 9 (Special Issue 3): 63–78

Loughman ZJ, Skalican KT, Taylor ND (2013) Habitat selection and movement of *Cambarus chasmodactylus* (Decapoda: Cambaridae) assessed via radio telemetry. *Freshwater Science* 32: 1288–1297, http://dx.doi.org/10.1899/12-166.1

Maude SH, Williams DD (1983) Behavior of crayfish in water currents: Hydrodynamics of eight species with reference to their distribution patterns in southern Ontario. *Canadian Journal of Fisheries* and *Aquatic Sciences* 40: 68–77, http://dx.doi.org/10.1139/f83-010

McAlpine DF, McAlpine AHE, Madden A (2007) Occurrence of the potentially invasive crayfish, *Orconectes virilis* (Decapoda, Cambaridae) in eastern New Brunswick, Canada. *Crustaceana* 80: 509–511, http://dx.doi.org/10.1163/156854007780440939

McLaughlin RL, Smyth ERB, Castro-Santos T, Jones ML, Koops MA, Pratt TC, Ve´lez-Espino L-A (2012) Unintended consequences and trade-offs of fish passage. *Fish and Fisheries* 14: 580–604, http://dx.doi.org/10.1111/faf.12003

Meeus J (1991) Astronomical algorithms. Willmann-Bell, Richmond, Virginia, 429 pp

Mount SJ, O'Reilly CM, Strayer DL (2011) A native species, the American Eel (*Anguilla rostrata*), as a biological control for an invasive crayfish (*Orconectes rusticus*) in tributaries to the Hudson River, NY. Section VII. In: Yozzo DJ, Fernald SH, Andreyko H (eds), Final Reports of the Tibor T. Polgar Fellowship Program, 2009. Hudson River Foundation, pp 1–22, http://www.hudsonriver.org/ls/reports/polgar_mount_tp_06_09_final.pdf (Accessed 23 February 2015)

Robinson CA, Thom TJ, Lucas MC (2000) Ranging behavior of a large freshwater invertebrate, the whiteclawed crayfish *Austropotamobius pallipes*. *Freshwater Biology* 44: 509–521, http://dx.doi.org/10.1046/j.1365-2427.2000.00603.x

Rogowski DL, Stockwell CA (2006) Assessment of potential impacts of exotic species on populations of a threatened species, White Sands pupfish, *Cyprinodon tularosa*. *Biological Invasions* 8: 79–87, http://dx.doi.org/10.1007/s10530-005-0238-9

Roscoe DW, Hinch SG (2010) Effectiveness monitoring of fish passage facilities: historical trends, geographic patterns and future directions. *Fish and Fisheries* 11: 12–33, http://dx.doi.org/10.1111/j.1467-2979.2009.00333.x

Rosewarne PJ, Piper AT, Wright RM, Dunn AM (2013) Do low-head riverine structures hinder the spread of invasive crayfish? Case study of signal crayfish (*Pacifastacus leniusculus*) movements at a flow gauging weir. *Management of Biological Invasions* 4: 273–282, http://dx.doi.org/10.3391/mbi.2013.4.4.02

Schilt CR (2007) Developing fish passage and protection at hydropower dams. *Applied Animal Behaviour Science* 104: 295–325, http://dx.doi.org/10.1016/j.applanim.2006.09.004

Schwartz FJ, Rubelmann R, Allison J (1963) Ecological population expansion of the introduced crayfish *Orconectes virilis*. *Ohio Journal of Science* 63: 266–273

Sorenson KL, Bolens SM, Counihan T (2012) Rapid range expansion of rusty crayfish *Orconectes rusticus* (Girard, 1852) in the John Day River, Oregon, USA. *Aquatic Invasions* 2: 291–294, http://dx.doi.org/10.3391/ai.2012.7.2.017

Swecker CD, Jones TG, Donahue II K, McKinney D, Smith GD (2010) The extirpation of Spinycheek Crayfish populations in West Virginia. *Southeastern Naturalist 9* (Special Issue 3): 155–164

Taylor CA (2002) Taxonomy and conservation of native crayfish stocks. In: Holdich DM (ed), Biology of Freshwater Crayfish. Blackwell Science, Oxford, pp 236–256

Webb M, Richardson A (2004) A radio telemetry study of movement in the giant Tasmanian freshwater crayfish, *Astacopsis gouldi*. *Freshwater Crayfish* 14: 197–204

Welsh SA, Liller H (2013) Environmental correlates of upstream migration of yellow-phase American eels in the Potomac River drainage. *Transactions of the American Fisheries Society* 142: 483–491, http://dx.doi.org/10.1080/00028487.2012.754788

Welsh SA, Aldinger JL (2014) A semi-automated method for monitoring dam passage of upstream migrant yellow-phase American Eels *Anguilla rostrata*. *North American Journal of Fisheries Management* 34: 702–709, http://dx.doi.org/10.1080/02755947.2014.910580